RPM	MODELLO *MODEL*	PORTATA *FLOW*		PRESSIONE *PRESSURE*		POTENZA *POWER*		PESO *WEIGHT*	
		l/min	GPM	bar	PSI	HP	kW	Kg	
1450	GHC 12/50 S	12.0	3.2	500	7250	15.4	11.3	21.1	S = Albero Maschio 24 mm *S = Male Shaft 24 mm*
	GHC 16/50 S	16.0	4.2	500	7250	20.5	15.1	21.1	
	GHC 20/50 S	20.0	5.3	500	7250	25.6	18.8	21.1	
1750	GHD 3.0/75 S	11.5	3.0	500	7250	14.7	10.8	21.1	
	GHD 4.5/75 S	16.0	4.2	500	7250	20.5	15.1	21.1	
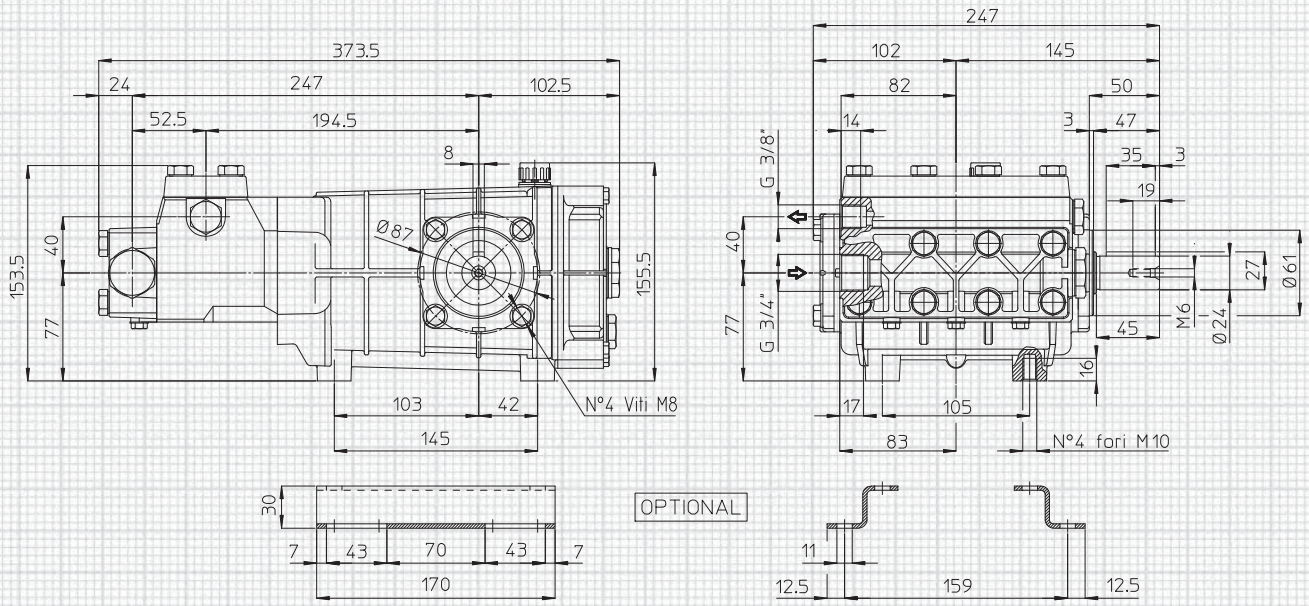
Dimensioni d'ingombro (mm) - *Overall Dimensions (mm)*