| RPM | MODELLO *MODEL* | PORTATA *FLOW* | | PRESSIONE *PRESSURE* | | POTENZA *POWER* | | PESO *WEIGHT* | |
|---|---|---|---|---|---|---|---|---|---|
| | | l/min | GPM | bar | PSI | HP | kW | Kg | |
| 1450 | GKC 17/28 S | 17.0 | 4.5 | 280 | 4060 | 12.2 | 9.0 | 17.4 | S = Albero Maschio 24 mm<br>*S = Male Shaft 24 mm* |
| | GKC 17/36 S | 17.0 | 4.5 | 350 | 5075 | 15.3 | 11.2 | 17.4 | |
| | GKC 21/28 S | 21.0 | 5.5 | 280 | 4060 | 15.1 | 11.1 | 17.4 | |
| | GKC 21/36 S | 21.0 | 5.5 | 350 | 5075 | 18.8 | 13.9 | 17.4 | |
| | GKC 26/28 S | 26.0 | 6.9 | 280 | 4060 | 18.7 | 13.7 | 17.4 | |
| | GKC 30/25 S | 30.0 | 7.9 | 250 | 3625 | 19.2 | 14.1 | 17.4 | |
| | GKC 34/20 S | 34.0 | 9.0 | 200 | 2900 | 17.4 | 12.8 | 17.4 | |
| | GKC 38/20 S | 38.0 | 10.0 | 200 | 2900 | 19.5 | 14.3 | 17.4 | |
| | GKC 42/18 S | 42.0 | 11.1 | 180 | 2610 | 19.4 | 14.2 | 17.5 | |
| | GKC 50/15 S • | 50.0 | 13.2 | 150 | 2175 | 19.2 | 14.1 | 17.5 | |
| 1750 | GKD 4.5/51 S | 17.0 | 4.5 | 350 | 5075 | 15.3 | 11.2 | 17.4 | |
| | GKD 5.5/40 S | 20.8 | 5.5 | 280 | 4060 | 14.9 | 11.0 | 17.4 | |
| | GKD 6.0/51 S | 22.7 | 6.0 | 350 | 5075 | 20.4 | 15.0 | 17.4 | |
| | GKD 7.0/40 S | 26.5 | 7.0 | 280 | 4060 | 19.0 | 14.0 | 17.4 | |

• Minimo 0.1 bar (1.5 PSI) di pressione in entrata / Min. 0.1 bar (1.5 PSI) inlet pressure
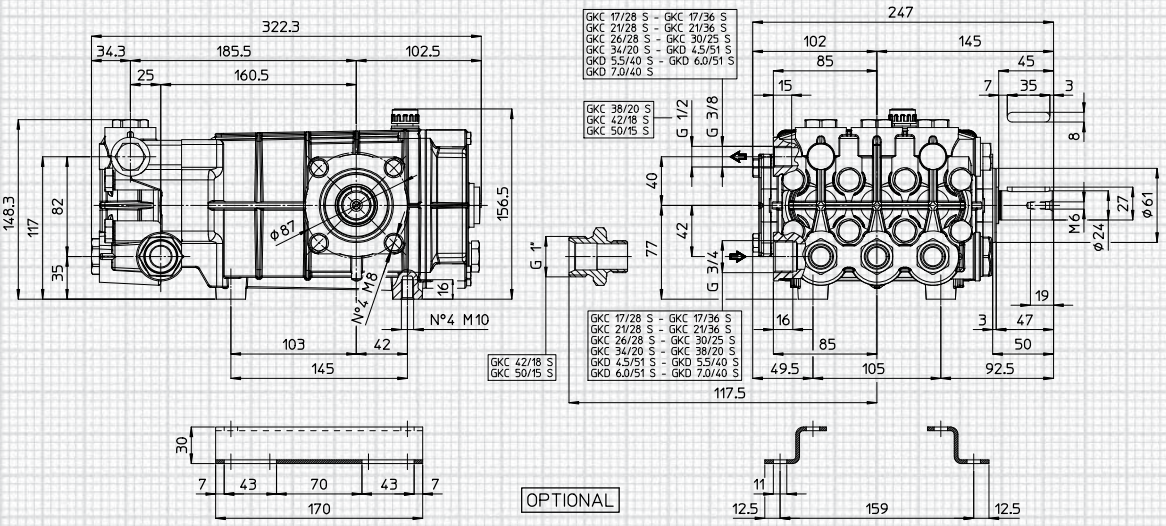
## Dimensioni d'ingombro (mm) - *Overall Dimensions (mm)*