| RPM | MODELLO *MODEL* | PORTATA *FLOW* | | PRESSIONE *PRESSURE* | | POTENZA *POWER* | | PESO *WEIGHT* | |
|---|---|---|---|---|---|---|---|---|---|
| | | l/min | GPM | bar | PSI | HP | kW | Kg | |
| 1000 | GB 21/20 S | 21.0 | 5.5 | 200 | 2900 | 10.8 | 7.9 | 14.8 | |
| 1450 | GC 21/20 S | 21.0 | 5.5 | 200 | 2900 | 10.8 | 7.9 | 14.8 | |
| | GC 26/20 S | 26.0 | 6.9 | 200 | 2900 | 13.3 | 9.8 | 14.8 | |
| | GC 30/20 S | 30.0 | 7.9 | 200 | 2900 | 15.4 | 11.3 | 14.8 | S = Albero Maschio 24 mm<br>*S = Male Shaft 24 mm* |
| | GC 34/17 S | 34.0 | 9.0 | 170 | 2465 | 14.8 | 10.9 | 14.8 | |
| 1750 | GD 5.5/30 S | 20.8 | 5.5 | 200 | 2900 | 10.7 | 7.8 | 14.8 | |
| | GD 7.0/30 S | 26.5 | 7.0 | 200 | 2900 | 13.6 | 10.0 | 14.8 | |
| | GD 8.5/30 S | 32.2 | 8.5 | 200 | 2900 | 16.5 | 12.1 | 14.8 | |
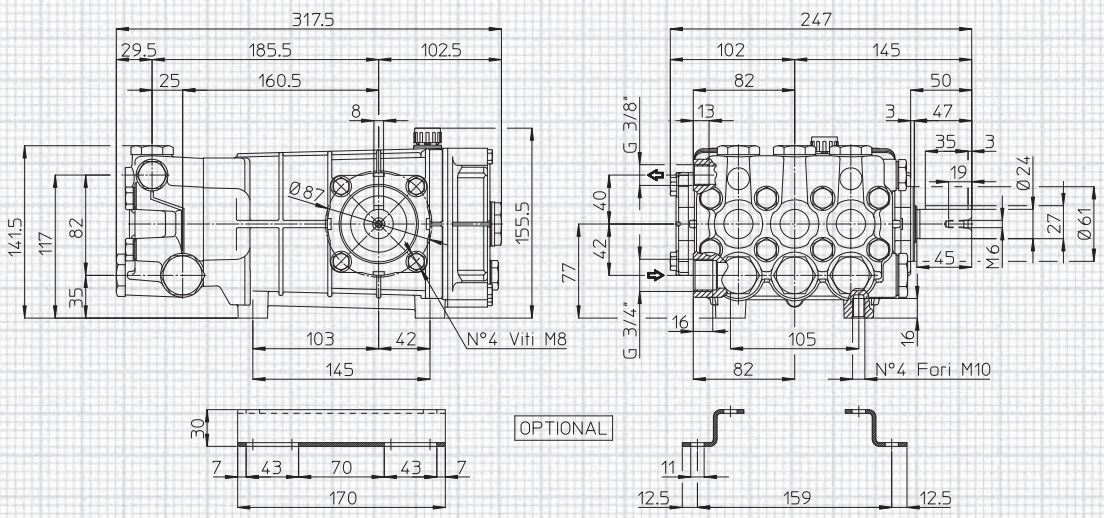
## Dimensioni d'ingombro (mm) - *Overall Dimensions (mm)*